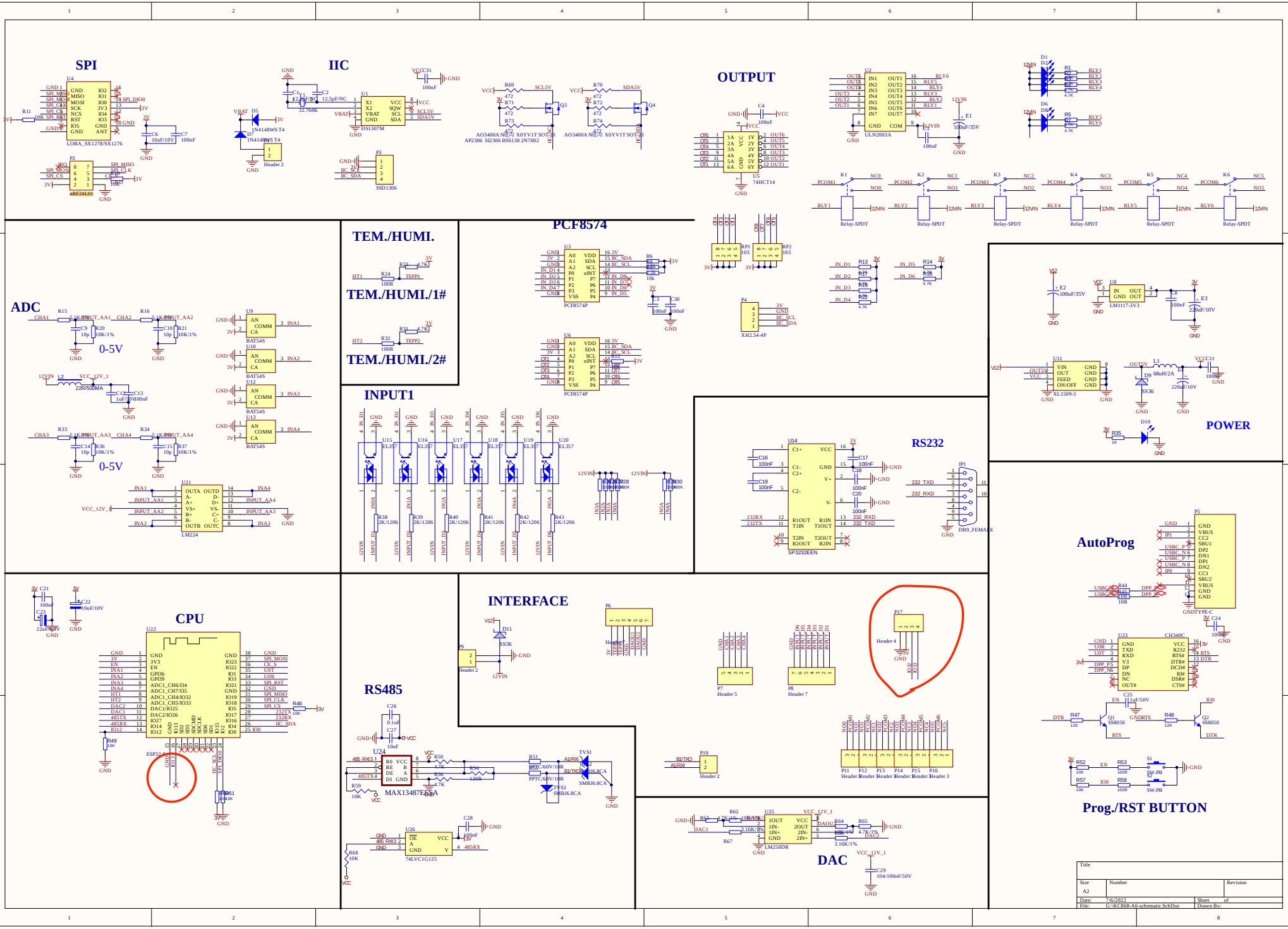
SPI
IIC
OUTPUT
PCF8574
TEM./HUMI.
TEM./HUMI./1#
TEM./HUMI./2#
ADC
0-5V
0-5V
INPUT1
RS232
POWER
AutoProg
CPU
RS485
INTERFACE
Prog./RST BUTTON
DAC
Title
Size
A2
Number
Revision
Date: 7/6/2022
Sheet of
File: G:\KC868-A6-schematic.SchDoc
Drawn By: